VERSATILE

Service Manual

FORD
NEW HOLLAND

Series 2 Tractors
700, 750, 800, 825, 850, 900 & 950

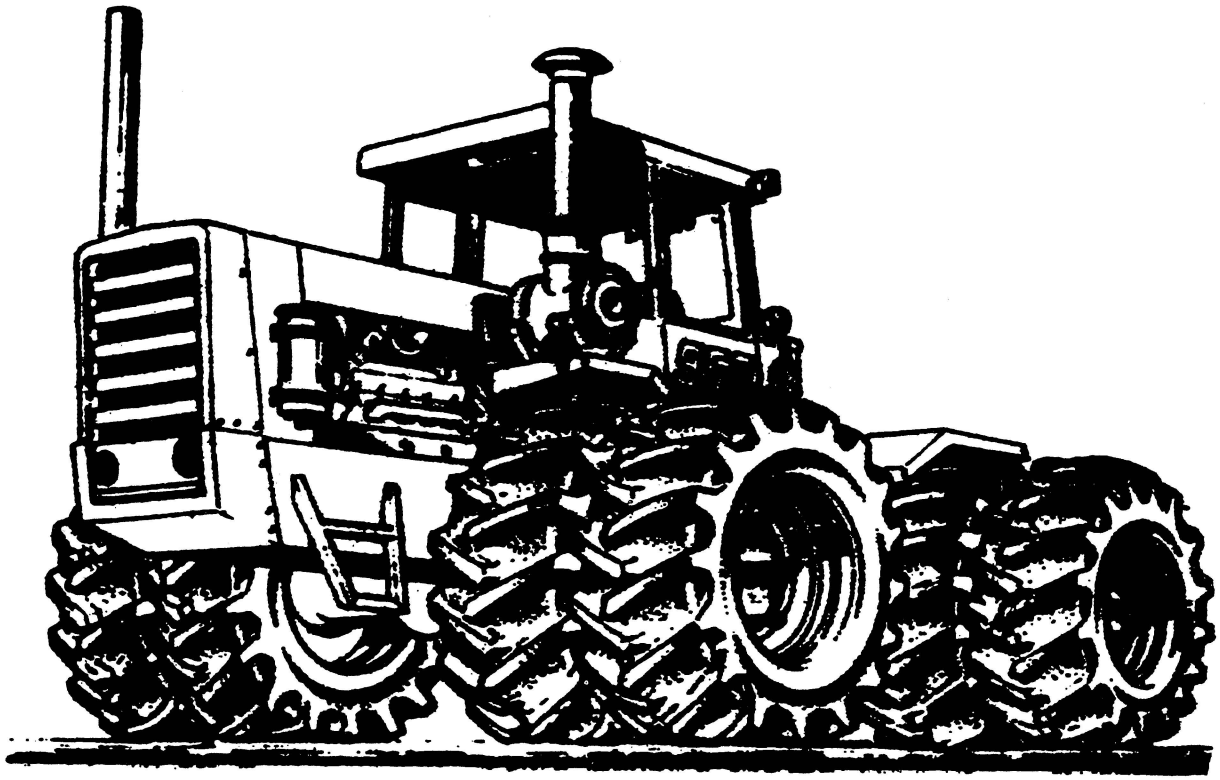

40070060

Reprinted

service manual

SERIES 2 FOUR-WHEEL DRIVE TRACTORS

APPLICABILITY: For 1977 Model Year Tractors.
Certain sections of this manual will also be applicable, in whole or in part, to preceding model years. The serviceman should read the table of contents to determine specific applicability.

APPLICABILITY: FOR 1977 MODEL YEAR TRACTORS.
CERTAIN SECTIONS OF THIS MANUAL WILL ALSO BE APPLICABLE, IN WHOLE OR IN PART, TO PRECEDING MODEL YEARS. THE SERVICEMAN SHOULD READ THE TABLE OF CONTENTS TO DETERMINE SPECIFIC APPLICABILITY.

Date of Issue, First Edition: 5 JUNE 1978

PU4001

FOREWORD

This Service Manual is issued to provide sufficient instructions for a qualified service mechanic to carry out Basic Servicing, Troubleshooting, Maintenance (removal, inspection and replacement of component assemblies,) and Overhaul (disassembly, inspection, repair and replacement of sub-assemblies).

A summary of the contents of each Section is provided in the main Table of Contents and a detailed coverage will be found in the Table of Contents preceding each Section.

The Service Manual should be used in conjunction with the Parts Manual for the specific Model year of Tractor. For the Serviceman's convenience and for reference to engine data and service, a list of Cummins Distributors is provided as Appendix 1 following Section 8: Structures.

REVISIONS AND ADDITIONS TO THE MANUAL

When changes are made in the unit covered in this service manual, pages will be marked to indicate whether they are replacement, or added pages. Replacement pages will show the revision number and carry the same page number as the original issue.Discard the original pageand insert the replacement page in its place. Added pages will carry the revision number, an existing page number, and an alphabetical suffix (for example A, B, etc.). Insert these pages after the existing page.

A new revision record page will also be issued with every update as a check sheet so that the reader can determine if the manual is complete. The purpose of a loose-leaf Service Manual is to enable us to keep the book updated, and to revise it if it is found necessary to provide additional information. This purpose will be defeated if additional or revised pages are supplied. Please insert them immediately.

A 'feed-back' page has been inserted at the back of this Service Manual. After using this book, it would be appreciated if the user fills in this form and returns it to Versatile Manufacturing Limited. Such information will help us to improve our manuals if required, and gived the user better manuals in the future.

https://www.ebooklibonline.com

Hello dear friend!
Thank you very much for reading.
Enter the link into your browser.
The full manual is available for immediate download.

https://www.ebooklibonline.com

SECTION 1:
SERVICING

SECTION 1: SERVICING
Table of Contents

1	**INTRODUCTION**	
2	**TOWING/TRANSPORTING**	
2.1	General	1-3
2.2	Towing	1-3
2.3	Transporting	1-3
3	**HOISTS AND JACKS**	
3.1	General	1-3
3.2	Jacks	1-4
3.3	Hoists	1-4
4	**SPECIFICATIONS AND CAPACITIES**	
4.1	General	1-4
4.2	Dimensions	1-4
4.3	Tire Size and Tractor Width	1-5
4.4	Tire Inflation	1-5
4.5	Weights	1-5
4.6	Engines	1-5
4.7	Cooling System	1-7
4.8	Air Cleaner	1-7
4.9	Exhaust System	1-7
4.10	Cold Start Aid	1-7
4.11	Clutch	1-7
4.12	Brakes	1-7
4.13	Transmission	1-7
4.14	Drivelines	1-7
4.15	Axles	1-8
4.16	Steering	1-8
4.17	Hydraulic System	1-8
4.18	Electrical System	1-8
4.19	Frames	1-8
4.20	Drawbar	1-8
4.21	Cab	1-8
4.22	Instrument Panel	1-9
4.23	Environmental Control Roof Unit	1-9
4.24	Radio	1-9
4.25	Options	1-9
5	**FUELS, FLUIDS AND LUBRICANTS**	
5.1	General	1-9
5.2	Fuel	1-9
5.3	Fluids	1-10

5.4	Lubricants	1-10
6	**LUBRICATION**	
6.1	General	1-11
7	**BELTS AND FILTERS**	
7.1	General	1-15
7.2	Belts-Replacement	1-15
7.3	Filters	1-15
8	**STORAGE**	
8.1	General	1-15
8.2	Preparation of Tractor for Storage	1-15
8.3	Preparation of Engine for Storage	1-16
8.4	Storing Batteries	1-16
8.5	Preparation after Storage	1-19
8.6	Startup of Engine after Storage	1-19
9	**TROUBLESHOOTING**	
9.1	General	1-19
9.2	Troubleshooting Guide	1-20
9.3	Troubleshooting Drive Train	1-22
9.4	Hydraulics	1-24
9.5	Troubleshooting Electrical System	1-26
9.6	Troubleshooting Environmental System	1-29

SECTION 1: SERVICING

1 Introduction

This section contains general information about specifications, capacities, lubricants, fluids and fuels for the tractor as a whole rather than having the information scattered throughout the other sections. A troubleshooting subsection will make reference to other service sections in the manual, which cover the tractor in greater detail.

2 Towing/Transporting

2.1 GENERAL

Towing or transporting a large four wheel drive tractor is a big job. Below are listed some recommendations to follow.

2.2 TOWING

Use the following recommendations when towing is necessary:

1. Use a strong chain, cable or towbar and attach securely to the front plate or drawbar of tractor.
2. Let engine run, if possible, so full use is made of hydrostatic steering.
3. Tow tractor slowly to allow operator to properly control towed unit.

NOTE

If engine can not be started, pull tractor in a gradual arc across the field. Steering tractor will be difficult.

– CAUTION

DO NOT TOW TRACTOR FASTER THAN 10 MPH (17 km/hr.)

DO NOT SLIDE TRACTOR FROM SIDE TO SIDE TO MANEUVER INTO PLACE FOR REPAIR, DAMAGE TO DRIVETRAIN WILL RESULT.

BE ALERT

4. Use a strong front end loader to pick up either front or rear of tractor and push (and articulate) into the service area.
5. Disconnect drivelines when transmission or axles need repair or overhaul.
6. When axle is broken, remove side covers from the planetary hubs and pull planetaries out.
7. Cover the exhaust stack on all turbocharged tractors to prevent the turbocharger seizing. This applies when engine can not be started.

2.3 TRANSPORTING

For long distances, hauling the tractor on a trailer is best. Use the following Procedures when hauling the tractor:

1. Check with local authorities as to laws, permits required and other information required to transport large machinery.
2. Use a trailer having the carrying capacity (30,000 lbs.) to haul tractors and other large machinery.
3. Use "wide load" signs and equip trailer with clearance lights to indicate to passersby of load.
4. Equip the trailer with a winch (minimum 10-ton capacity) to pull tractor on to the trailer.
5. Securely chain tractor to trailer to prevent tractor movement or tipping.
6. Block wheels and/or engage park brake to prevent tractor movement.
7. Inspect chains regularly looking for cracks, gouges, wear, bent links, worn or bent hooks. Repair any damaged links and hooks.
8. Cover the exhaust pipe on all turbocharged tractors to prevent the turbocharger seizing.

3 Hoist and Jacks

3.1 GENERAL

Hoist and jacks are most useful in properly servicing the tractor. Use the following recommendations to aid in safely working on the tractor or any other equipment.

3.2 JACKS

Improper use of jacks or lifting devices results in serious accidents. Use the following recommendations when raising tractor using a jack:

1. Select a jack strong enough to carry the load. The minimum jack required is five ton capacity.
2. Use jack carefully. Dropping or tossing distorts or cracks the jack housing causing jack to fail.
3. Take proper care of jack by using proper lubricants as specified in the operating instructions. Do not use leaky jacks to lift heavy equipment.
4. Stabilize tractor by placing transmission into gear; engaging park brake; chocking or blocking wheels securely.
5. Brace up the center pivot frame by applying a strong wedge on the frame pivot to prevent jackknifing of tractor.
6. Use a level ground or floor surface so jack will lift straight up and down.
7. Place jack securely under axle tube, frame, or drawbar where it is strong enough to support the lifted weight.
8. Use a heavy block as a base for the jack if working on ground. It should be long and wide enough to keep jack from tipping, sinking or shifting. Any additional blocking should be under the jack.
9. Jack up front and/or rear frame just enough to install steel safety stands under axle tubes or frame.
10. Check jack position after it has started to lift. Lower jack immediately if it starts to lean. Reset jack; block tractor more securely and lift again.
11. Keep tractor stable by not raising so high it will slide off jack saddle.
12. Remove jack handle from mechanical jacks, when not in use, to prevent being stuck by handle.
13. Hold handle of mechanical jack firmly to prevent kicking as tractor is being raised or lowered.
14. Place support stands under tractor. Lower jack and let tractor rest on stands. This provides a solid support for the tractor when jack is removed.

3.3 HOISTS

Improper hoisting equipment can create accidents and injuries. These accidents are caused by overloading the hoist or rigging the lift chains so they slip. Practice the following:

1. Use a proper chain hoist and frame to properly lift tractor. The minimum capacity required for the hoist is ten tons; for the A-frame or overhead support is seven and one-half tons; and for the support stands is three tons.
2. Never overload a hoist or frame beyond its carrying capacity.
3. Inspect chains regularly looking for cracks, gouges, wear, or bent links. Repair any damaged links.
4. Inspect hooks regularly and replace any that are bent, cracked, spring or worn. If in doubt, compare the dimensions of a new hook with the old one. Replace if there are any differences in the size or shape.
5. Select suitable, balanced lift point on tractor frame. Place hook and frame directly over the point of lift.
6. Set chain to prevent the pull point from slipping.
7. Protect yourself from injury as tractor is being raised by doing the following:
   a) Do not stand on tractor as you are lifting.
   b) Keep hands away from pinch points where chain links tighten or chain is against tractor frame.
   c) Do not let tractor swing and strike personnel or fame as it leaves the ground.
   d) Keep support stands nearby and place under tractor when proper height is reached.
   e) Do not go under tractor supported by a chain hoist. Place support stands under tractor before working under tractor.

4 Specifications and Capacities

4.1 GENERAL

The specifications and capacities apply to the Models 700, 750, 800, 825, 850, 900, 950 Series 2 tractors.

4.2 DIMENSIONS

Wheel Base - 130 in.
Tread, with 20.8 x 38 single tires - 72 in. between centers.
Overall length - 253 in. without three-point hitch
Overall width - 93 in. with 20.8 x 38 single tires
Cab height - with 20.8 x 38 single tires
Models 700, 750, 800, 825: 125 in.
Models 850, 900, 950: 126-3/4 in.

Maximum allowable height - (Clearance for Bridges, Overpasses, etc.) - with 20.8 x 38 Single Tires, and with antenna vertical and adjusted to 30 in. height:

Models 700, 750, 800, 825: 156 in.
Models 850, 900, 950: 156-3/4 in.

Turning Radius:
236 in. with 18.4 x 38 Dual tires
239 in. with 20.8 Dual tires
216 in. with 24.5 x 32 Single tires
222 in. with 30.5 x 32 Single tires
Nominal - 203.5 in. measured to center line of 72 in. tread.

4.3 TIRE SIZE AND TRACTOR WIDTH

Tractor width (Outside of tires):	Inner tires - 91.5 in. Outer tires - 137.5 in.
20.8 x 38 Dual tires Between tread centers:	Inner tires - 72 in. Outer tires - 112 in.
(Outside of tires):	Inner tires - 93 in. Outer tires - 143.5 in.
24.5 x 32 Dual tires Between tread centers:	72 in.
Tractor Width (Outside of tires):	97.5 in.
24.5 x 32 Single tires Between tread centers:	72 in.
Tractor width (Outside of tires):	97.5 in.
30.5 x 32 Single tires Between tread centers:	79.12 in.
Tractor width (Outside of tires):	109 in.

4.4 TIRE INFLATION

For proper tire inflation, follow the recommendations listed (Ref. Table 1-1).

IMPORTANT

Outside tires (duals) should have 2 psi less pressure than the inside tires.

4.5 WEIGHTS

Table 1-2 lists the weights of Series 2 tractors in shipping weight, maximum operating and recommended range.

4.6 ENGINES

Model 700

Cummins V-555-C210 V8 diesel

Maximum brake horsepower - 210 @ 2850 rpm (per SAE Standard J816a)

Maximum torque - 425 lb ft @ 1800 rpm

Full load governed speed - 2850 rpm

Full throttle no load speed - 3100 to 3135 rpm

Idle speed - 1000 rpm

Bore - 4.625 in.

Stroke - 4.125 in.

Displacement - 555 cu. in.

Compression ratio - 17.0:1

Lubrication system - 26 U.S. qts., 21.7 Imp. qts. Full flow oil filter with by-pass oil conditioner, filter and oil to water cooler

30° angular capability oil pan

Mounts - VERSATILE design, fully rubber mounted.

TABLE 1-1: Tire Inflation Chart

TIRE SIZE	PLY RATING	LITTLE OR NO BALLAST	MAX BALLAST OR HEAVY LOAD
18.4 x 38 *	6	16 psi	16 psi
20.8 x 38 *	8	16 psi	20 psi
24.5 x 32	10	18 psi	20 psi
30.5 x 32	10	16 psi	16 psi

* When used as duals, minimum tire pressure is 12 psi. Use ballast on duals only.

TABLE 1-2: Operating Weights

	700	750	800 825	850	900	950
Maximum Operating Weight (lbs.)	28,000	28,000	28,000	28,000	29,000	32,500
Recommended Range of Operating Weights (lbs.)	22,500 to 25,000	23,000 25,000	24,000 26,000	26,000 27,500	27,000 28,500	29,300 31,000
Shipping Weight with 20.8 x 38 Tires (lbs.)	16,920	18,020	18,100	18,380	17,920	18,045

For detailed recommendations of operating weights, consult Specifications Section of Operator's Manual for each Model.

Model 750

Cummins N-855-C220 (in-line six cylinder) diesel

Maximum brake horsepower - 220 @ 2100 rpm (per SAE Standard J-816a)

Maximum torque - 644 lb ft @ 1500 rpm

Compression ratio - 15.8:1

Model 800

Cummins N-855-C235 (in-line six cylinder)

Maximum brake horsepower - 235 @ 2100 rpm (per SAE Standard J-816a)

Maximum torque - 660 lb ft @ 1500 rpm

Compression ratio - 15.8:1

Model 825

Cummins NT-855-C250 (in-line six cylinder)

Maximum brake horsepower - 250 @ 2100 rpm (per SAE Standard J-816a)

Maximum torque 750 lb ft @ 1500 rpm

Compression ratio - 15.8:1

Model 850

Cummins NT-855-C280 (in-line six cylinder)

Maximum brake horsepower - 280 @ 2100 rpm (per SAE Standard J-816a)

Maximum torque - 806 lb ft @ 1500 rpm

Compression ratio - 14.0:1

Common Specifications for 855 Engine (Models 750, 800, 825, 850 Tractors)

Full load governed speed - 2100 rpm

Full throttle no load speed - 2250 rpm to 2300 rpm

Idle speed - 1000 rpm

Bore - 5.50 in.

Stroke - 6.00 in.

Displacement - 855 cu. in.

Lubrication system - 41 U.S. qts., 34.6 Imp. qts. Full flow oil filter with by-pass oil conditioner filter and oil to water cooler

30° angularity capability oil pan

Mounts - VERSATILE design, fully isolated

Model 900

Cummins V-903-C-295 V8 diesel

Maximum brake horsepower - 295 @ 2400 rpm (per SAE Standard J-816a)

Maximum torque - 706 lb ft @ 1800 rpm

Compression ratio - 16.5:1

Model 950

Cummins VT-903 V8 diesel Turbocharged

Maximum brake horsepower - 348 @ 2400 rpm (per SAE Standard J-816a)

Maximum torque - 848 lb ft @ 1800 rpm

Compression ratio - 15.5:1

Common Specifications for V-8 engine (Models 900 and 950 Tractors)

Full load governed speed - 2400 rpm

Full throttle no load speed - 2550 rpm to 2640 rpm

Idle speed - 1000 rpm

Bore - 5.50 in.

Stroke - 4.75 in.

Displacement - 903 cu. in.

Lubrication system - 34 U.S. qts., 28.3 Imp. qts. Full flow oil filter with by-pass oil conditioner and oil to water cooler.

30° angular capability oil pan

Mounts - VERSATILE design, fully isolated

4.7 COOLING SYSTEM

Capacity: Model 700 - 48 U.S. qts., 40 Imp. qts. Models 750, 800, 825, 850 - 49 U.S. qts., 41 Imp. qts. Models 900, 950, - 53 U.S. qts., 42 Imp. qts.

Radiator (4-row core) rubber mounted. Model 700 - 750 sq. in. All others - 930 sq. in.

Independent surge tank.

Quickly removable perforated metal grill screen

fan (6-blade sucker type).

Model 700 - 24 in. diameter.

Models 750, 800 - 26 in. diameter.

Models 825, 850, 900, 950 - 28 in. diameter.

4.8 AIR CLEANER

Models 700, 750, 800 and 900:

United-Triphase (700 Model E112D18; 750, 800, 900-Model 114D10)

Models 825, 850, 950:

Donaldson Strata System STB14-0019

Both United and Donaldson systems:

Dual element, dry type with safety element

Restriction indication gauge on instrument panel

4.9 EXHAUST SYSTEM

Model 700 - One 8.5 in. diameter x 36 in. muffler

Models 750, 800, 825, 850, 950 - One 8.25 in. x 11.5 in. elliptical x 40 in. muffler.

Models 750, 800, 825, 850, 950 - One 8.25 in. x 11.5 in. elliptical x 40 in. muffler.

Model 900 - Two 8.5 in. diameter x 35.3 in. mufflers.

Mufflers are rubber-mounted.

Built-in vacuum aspirator for air cleaner.

Built-in spark arrestor (where mandatory).

4.10 COLD START AID

Make - KBI

Type - Ether, operated from instrument panel

4.11 CLUTCH

Dana Spicer - 14 in. two plate dry type, self-adjusting

Model AS-1402 (Model AS2-1402SD, Model 950 only) pull type with angle spring

Spring loaded, cushion hub discs

Ceramic button linings

Greaseable shaft bearing with slinger and sealed release bearing

Foot operated, mechanically actuated

Integral disc type, torque limiting transmission brake

Static torque rating - 16.40 lb ft

4.12 BRAKES

Road Brake - driveline mounted, 15 in. disc and self-adjusting caliper, hydraulically actuated by a single foot pedal.

Park Brake - same disc with caliper mechanically actuated by over center lever.

4.13 TRANSMISSION

VERSATILE design, completely rubber mounted

12 speed constant mesh with sliding collar shifting

4 shafts vertically arranged, 3.0 in. diameter, drilled for lubrication.

Independent lubrication system with pump, 10 micron filter, cooler, steel lines and wire braid hose, dash mounted oil pressure warning light.

Oil capacity - 21.5 U.S. qts., 16.8 Imp. qts.

Dipstick oil level check and filler point

Timken tapered roller bearings

Helical forward gears with straight cut (spur) reverse gears

One dash mounted, in-line shift, range lever

One floor mounted gear shift lever

Each model has five field speeds between:

- Model 700 - 4.1 and 7.5 mph
- Models 750, 800 & 825 - 4.1 and 7.3 mph
- Model 850 - 4.1 and 7.3 mph
- Models 900 & 950 - 4.0 and 7.2 mph

4.14 DRIVELINES

Engine to transmission - Spicer 1550 Series (Model 950 - Spicer 1600 Series)

Transmission to axles - Spicer 1600 Series

TABLE 1-3: Speeds in Miles per Hour

MODEL	700 2850 rpm				750, 800, 825 2100 rpm				850 2100 rpm				900 & 950 2400 rpm			
Range	1	2	3	4	1	2	3	4	1	2	3	4	1	2	3	4
Low Gear	2.6	3.1	3.5	4.1	2.6	3.0	3.5	4.1	2.6	3.0	3.5	4.1	2.5	3.0	3.3	4.0
Second Gear	4.7	5.6	6.3	7.5	4.7	5.5	6.3	7.3	4.7	5.5	6.3	7.3	4.5	5.4	6.0	7.2
High Gear	9.1	10.8	12.2	14.5	9.2	10.7	12.3	14.3	9.2	10.7	12.3	14.3	8.8	10.5	11.7	14.1
Reverse	3.4	4.0	4.5	5.3	3.4	3.9	4.5	5.2	3.4	3.9	4.5	5.2	3.3	3.9	4.3	5.2

NOTE: All speeds are with 24.5 x 32 tires (31.5 in. loaded radius tires).

Spicer Glidecote telescoping action

Driveline carrier bearing on center swing frame

4.15 AXLES

VERSATILE design

Spiral bevel (and planetaries, on Models 850, 900, 950) differential with outboard planetary floating ring gear final drive.

Eaton differential - (Models 700, 750, 800, 825 - Series 17103. Models 850, 900, 950 - Series 23120)

Differential housing and axle tubes - Ductile iron

Oil Capacity -
Models 700, 750, 800, 825 - 38 U.S. qts., 31.6 Imp. qts.,
Models 850, 900, 950 - 40.4 U.S. qts., 34.0 Imp. qts.

Lubrication - SAE 90 MIL 2105 B gear oil

Axle seals - Unitized (combined neoprene seal and wear sleeve), prelubricated labyrinth-type guard.

Wheel mounting bolts - Twelve, 0.75 in. diameter

4.16 STEERING

Articulated frame - 42 degrees in each direction

Fully hydrostatic actuation

Two 3 in. I.D. x 16.5 in. stroke actuators mounted with 1.25 in. self-aligning ball bushings.

4.17 HYDRAULIC SYSTEM

Pump gear type. Flow: Model 700 - 25 U.S. gpm. Models 750, 800, 825, 850 - 23.5 U.S. gpm, Models 900, 950 - 26.9 U.S. gpm.

Drive - engine mounted gear driven

Relief valve - set at 2300 - 50 psi

Two-way spools which self-cancel at 2100 - 0 to 100 psi

One four-way spool with float position

Reservoir - vented, 74.5 U.S. qts., (62 Imp. qts.) capacity

Dipstick oil level check and low level sight glass

4.18 ELECTRICAL SYSTEM

12 volt - negative ground system

12 volt - 75 amp Delco-Remy alternator

Two 8D-900 amp 12 volt batteries, connected in parallel inside clean compartment

AWG 00 starting cables

Circuit breakers - automatic resetting type

Fuses - accessible and identified

Six 60 watt working lights (exceeds ASAE 279.6)

Two red tail lamps for highway (ASAE 279.6)

4.19 FRAME

Articulated frame 4-wheel drive

Oscillates to 15 degrees in both directions

Front frame - 3/8 in. formed side plates with 1/2 in. rear end plate. Reinforcement near axle mounting pads

Rear frame - 1/2 in. formed plate

4.20 DRAWBAR

Swinging clevis type - 1.75 in. x 5.0 in. steel with wear block, 1.5 in. hardened steel pin with locking lever.

Replaceable hardened bushings

Height - 18 in. to top of main member

4.21 CAB

VERSATILE design - independent module type with rollover protective structure (ASAE S336.1)

Fully isolated on rubber mounts

Acoustically insulated interior

tinted safety glass, side windows open for emergency exit

Height - 63 in. outside

Width - 56 in. outside

Lap type seat belt, easily adjustable

Bostrom seat, fully adjustable. Some '76 models have swivel seat.

Self-cleaning cab air filter allows for longer periods between manual servicing. The filter is removable (without the use of tools) from outside the cab.

4.22 INSTRUMENT PANEL

Gauges - engine tachometer with hour meter; engine oil pressure; engine temperature; battery condition voltmeter; fuel level

Warning lights - transmission oil pressure; park brake; alternator

Key ignition

Manual override button for automatic shut down system

Hazard warning-signal flasher combination

Light switch

Ether cold start aid control

International identification symbols on gauges and warning lights (ASAE S303.4)

4.23 ENVIRONMENTAL CONTROL ROOF UNIT

VERSATILE design

Operator controlled recirculation door - provides cool inside air recirculation to reduce heat load on air conditioning system, without losing cab pressurization

24,000 BTU/hr. air conditioning evaporator core to cool cab air and remove humidity

Large heater to warm cab and defrost windshield

Automatic shut down of compressor if refrigeration system becomes low on freon, or if pressure becomes too high

Indicator lights to indicate reasons for shut down

Pressurization and recirculation fan, 3-speed selection

Fan automatically comes on when ignition key is turned on to prevent operation of tractor without cab pressurization

4.24 RADIO

(1977 Models)

AM-FM (stereo) - 2 speakers

Make - automatic radio

Solid state circuitry

Five push button station selection

Volume and tone controls

Telescoping antenna, spring mounted

(1976 Models)

AM Solid state Radio

Five push button station selection

Volume and tone controls

Telescoping antenna, spring mounted

4.25 OPTIONS

No-spin differential - front axle only or front and rear axles.

Rear fenders

Three-point hitch (category III) - lift capacity of 12,370 lbs. at 24 in. to the rear of the lower link points throughout the working range. Maximum lift is 18,270 lbs. at the lift points.

Quick-attach coupler for three-point hitch

Tires - singles - 24.5 x 32, 30.5 x 32
duals - 18.4 x 38, 20.8 x 38

Rice and Cane Tires - 24.5 x 32 singles (Goodyear and Firestone)
30.5 x 32 singles (Goodyear and Firestone)

Dual wheel spacer - 14 in. for 18.4 x 38 tires

Engine block heater

5 Fuels, Fluids and Lubricants

5.1 GENERAL

The following information lists fuels, fluids and lubricants used on the Series 2 Tractors. Also lubricant capacities for the various models are listed.

5.2 FUEL

No. 2 diesel fuel is recommended. No. 1 diesel fuel is also satisfactory. Any other fuel should meet the following specifications:

Sulfur content less than one per cent.

Sediment and water content less than 0.1 per cent

Cetane number 40 or greater. A higher Cetane number fuel may be required at low temperatures or high altitudes.

Pour point below the lowest expected temperature

Ash content less than 0.02 per cent

Viscosity range 0.021 - 0.089 sq. in./sec. at 100° F.

Fuel capacity - 185 U.S. gal., 154 Imp. gal.

REFUELING

Observe all cautions and warnings in the Operator's Manual. Refer to "Tractor Safety" (or "Safety Rules") and "Operation" section of Operator's Manual for more information on refuelling.

5.3 FLUIDS

Coolant Mixture

Water: Clean and preferably soft. Water suitable for drinking is adequate as a coolant.

– CAUTION –

DO NOT USE DOW CHEMICAL THERM 209 BRAND ANTIFREEZE. IT IS NOT COMPATIBLE WITH THE CORROSION INHIBITOR.

BE ALERT

Antifreeze: Commercial grade, ethylene glycol base, used in proportions recommended by the manufacturer.

Coolant Conditioner Filter: (Dry Chemical Additive) used when coolant is replaced.

Engine Coolant Capacities -

Model 700 - 48 U.S. qts., 40 Imp. qts.

Models 750, 800, 825, 850 - 49 U.S. qts., 40.8 Imp. qts.

Models 900, 950 - 53 U.S. qts., 44.1 Imp. qts.

Brake Fluid

SAE specification 70R3.

Hydraulic Fluid

Temperatures above 40° F - Esso Hydraul 56 or SAE 20 MS Motor Oil

Temperatures below 40° F - Dexron or 5W-20 MS Motor Oil

Liquid Ballast

The tire ballast consists of commercial Type 1 Calcium Chloride Flake (77 per cent $CaCl_2$) mixed with water (Ref. Table 1-4). If Type 2 Flake (94 per cent $CaCl_2$) is used, the weights given can be reduced by 25 per cent.

The 3-1/2 lb./gal. Calcium Chloride Solution is slush-free to -12° F (-24.4° C) and freezes solid at -52°F. The 5 lb./gal. solution is slush-free to -52°F and will freeze solid at -62°F.

5.4 LUBRICANTS

Table 1-5 lists the recommended lubricants for the tractor used for varying temperature conditions.

TABLE 1-4: Liquid Ballast Calculations

	WATER ONLY			3-1/2 LB. $CaCl_2$ SOLUTION PER GAL				5 LB. $CaCl_2$ SOLUTION PER GAL			
TIRE SIZE	US GAL	IMP GAL	WT LBS	US GAL	IMP GAL	LBS $CaCl_2$	TOTAL WEIGHT	US GAL	IMP GAL	LBS $CaCl_2$	TOTAL WEIGHT
18.4 x 36	110	92	917	94	78	329 lb.	1113 lb.	89	74	445 lb.	1190 lb.
20.8 x 36	140	117	1168	120	100	420 lb.	1420 lb.	114	95	470 lb.	1521 lb.
24.5 x 32	170	142	1418	146	122	511 lb.	1729 lb.	138	115	690 lb.	1841 lb.
30.5 x 32	217	181	1810	186	155	651 lb.	2202 lb.	175	146	875 lb.	2335 lb.

NOTE

The amount of liquid required will have to be determined as outlined in the calculation of wheel slippage given in the Operator's Manual.

TABLE 1-5: Lubricant Chart

LOCATION	CONDITIONS	TYPE	GRADE
Oils			
Engine Crankcase	Above 40° F (-4° C)	SAE 30	CC/CD
	20° F to 60° F (-7° C to 16° C)	SAE 20 - 20W	CC/CD
	-10° F to 30° F (-23° C to -1° C)	10W	CC/CD
	Below -10° F (-23° C)	See 'Arctic Oil Recommendations' in Cummins Manual	
Transmission and Hydraulic System	Above 40° F (4° C) Below 40° F (4° C)	Hydraul 56 or equivalent SD SAE 5W-20	
Differentials and Axle Planetary Gears	Above 90° F (32° C) Below 90° F (32° C)	SAE 140 SAE 90	GL5 (MIL2105B)* or GL5 (MIL2105C)*
Grease			
Pressure Grease Fittings	All	SAE High-Temperature Multi-Purpose	

* No Zinc Additives

American Petroleum Institute Lubricant Grades

CC - Service typical of lightly supercharged diesel engines operating in moderate to severe duty. These oils provide protection from high temperature deposits.

CD - Service typical of supercharged diesel engines in high output, high speed duty. These oils provide protection from bearing corrosion and high temperature deposits in supercharged engines using fuels of a wide quality range.

NOTE

Turbo-charged tractors require oil with the 'CD' classification.

GL5(MIL2105B) or (MIL2105C) - Gear Lubricant for service 'GL5 (Hypoid Gears) meeting specification MIL2105B and MIL2105C with no zinc additives.

Lubricant Capacities

Engine Oil - Model 700 - 26 U.S. qts., 21.7 Imp. qts.

Models 750, 800, 825, 850 - 41 U.S. qts., 34.1 Imp. qts.

Models 900, 950 - 34 U.S. qts., 28.3 Imp. qts.

Hydraulic System - 74.5 U.S. qts., 28.3 Imp. qts.

Transmission - 21.5 U.S. qts., 17.9 Imp. qts.

Differential (each)

Axle and two planetaries -

1976 All Models - 38 U.S. qts., 31.6 Imp. qts.,

1977 Models 700, 750, 800, 825 - 38 U.S. qts., 31.6 Imp. qts.;

1977 Models 850, 900, 950 - 41 U.S. qts., 32.8 Imp. qts.

Each planetary housing - 4 U.S. qts., 3.2 Imp. qts.

6 Lubrication

6.1 GENERAL

Table 1-6 lists the lube points on the Series 2 tractors. Along with the table are lube point illustrations (Ref. Figure 1-1).

Refer to subsection 5 for capacities and requirements.

Suggest:

If the above button click is invalid.

Please download this document

first, and then click the above link

to download the complete manual.

Thank you so much for reading

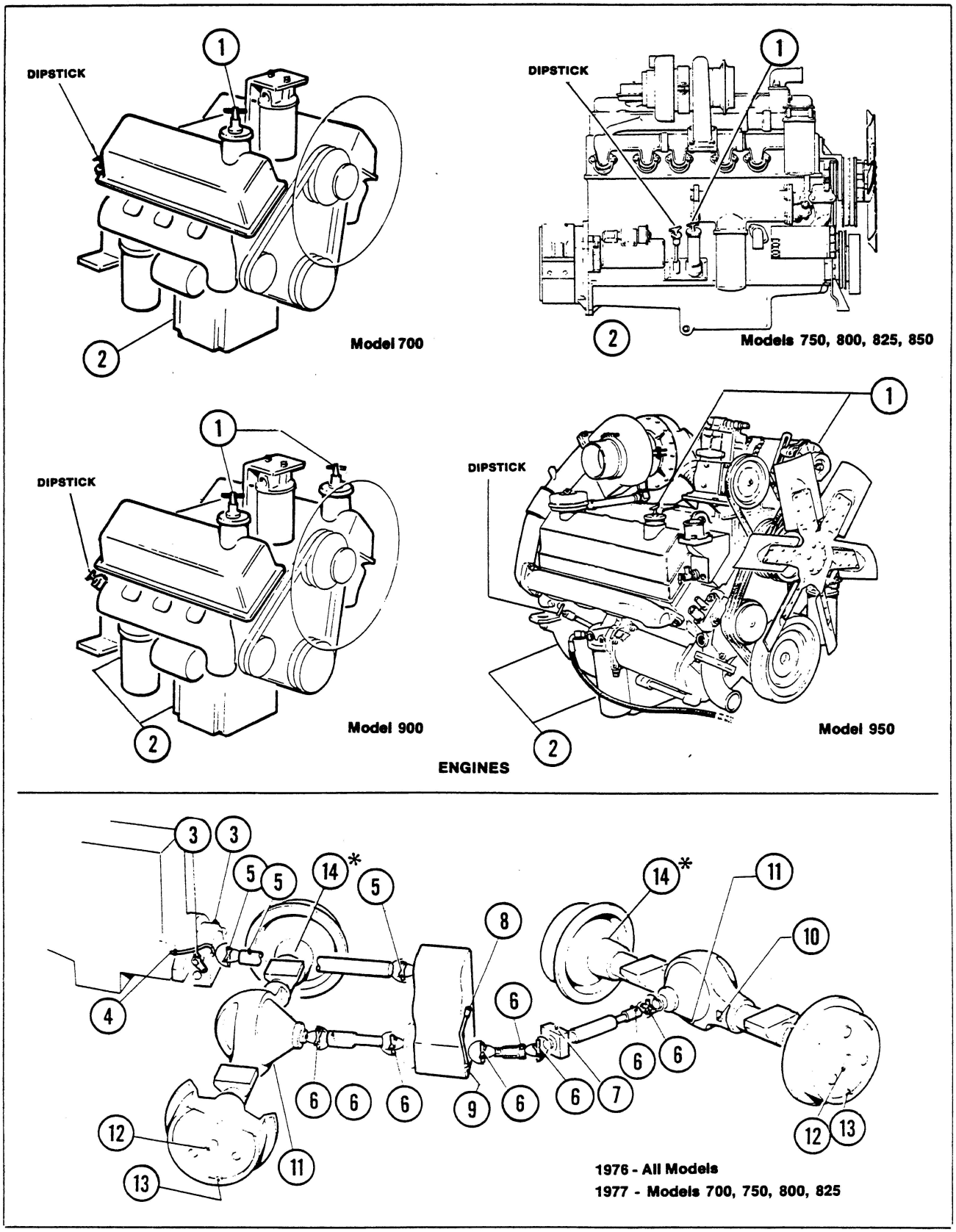

FIGURE 1-1 Lube Points Sheet 1

https://www.ebooklibonline.com

Hello dear friend!
Thank you very much for reading.
Enter the link into your browser.
The full manual is available for immediate download.

https://www.ebooklibonline.com